Western Electric

359/215

S 2020 0055

TECHNICAL DIGEST
NO. 63, (JULY 1981)

350/6.6

LASER SCANNING SYSTEM

B. E. TRUAX

Engineering Research Center

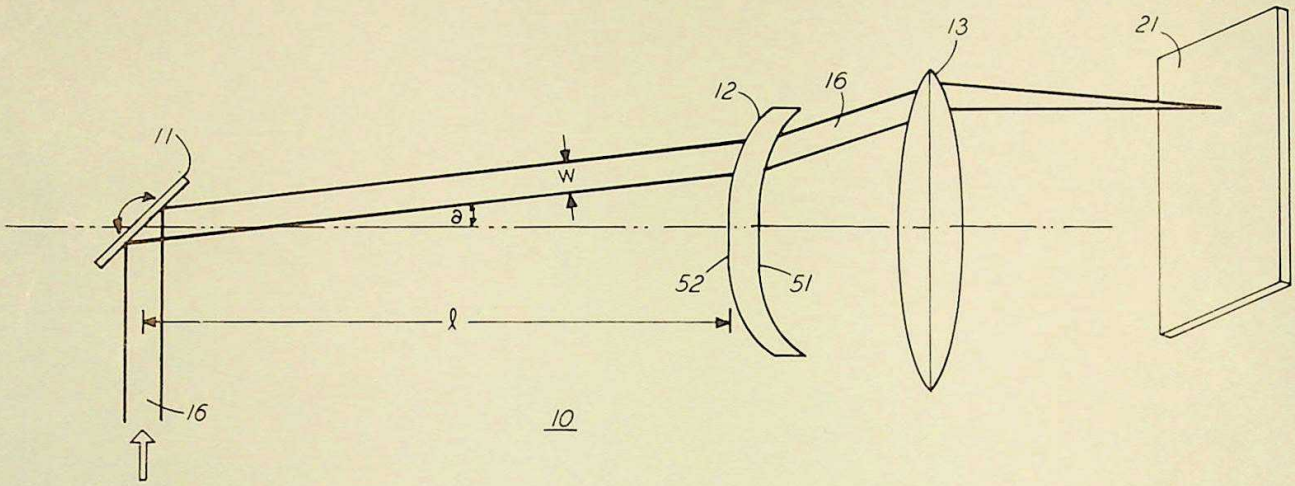

As laser scanning finds more applications in industry, faster and higher resolution scanning systems are needed at prices that are competitive with systems that they replace. The most economical high speed systems available today use resonant oscillating mirrors. However, these scanners, although inexpensive cannot be used in many applications due to their varying spot velocity during a scanning cycle.

The scanning system, generally indicated by the numeral 10, in the above figure, substantially overcomes such problems. The system 10 is comprised of a resonant oscillating mirror 11, a bi-aspheric correcting lens 12 and a focusing lens 13.

In operation, a laser beam 16 is directed towards the oscillating mirror 11 and is reflected therefrom through the correcting lens 12. The beam 16 exiting the correcting lens 12 is focused on an article 21 by the focusing lens 13. The parameters of the correcting lens 12 are such as to linearize the sinusoidally scanned beam by distorting the beam so that its exit angle varies at a constant velocity during the scan while maintaining the collimated character of the light.

In a particular embodiment ℓ = 75 cm.; W = 5 mm; ∂ max = 4°; the correcting lens 12 was a plastic material having an index of refraction of 1.489450 and a thickness of 2.5 cm.

US 4. 350 – 6. 6

359-215

The aspheric surface constants for the correcting lens 12 were as follows:

ORDER	SURFACE 51	SURFACE 52
4	1.52603×10^{-3}	1.43875×10^{-3}
6	4.106462×10^{-5}	6.01068×10^{-5}
8	-1.084101×10^{-6}	-9.79799×10^{-7}
10	2.154156×10^{-8}	1.07239×10^{-7}